Ergotron® 200 Series

Dimensional Illustrations

Combo Arm

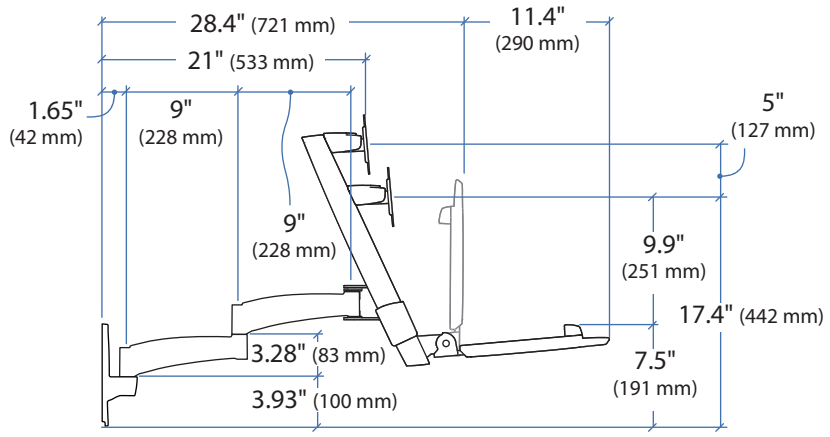

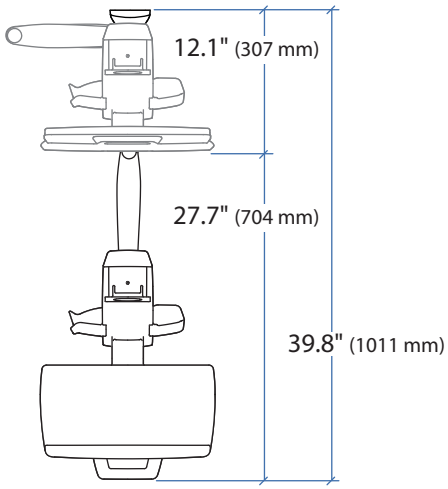

Top View

Wall Mount Bracket

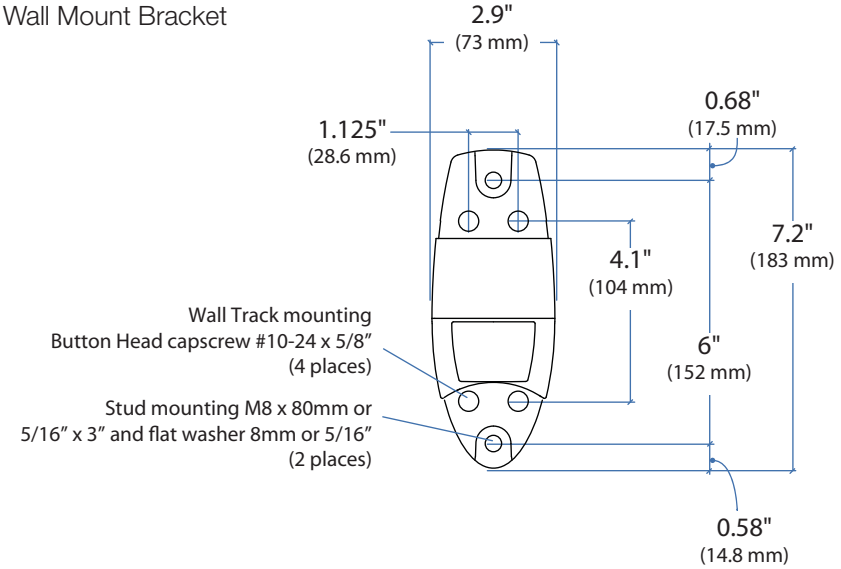

Mouse/Scanner Holder

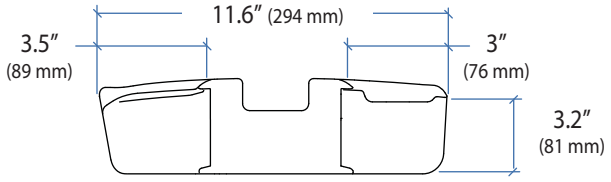

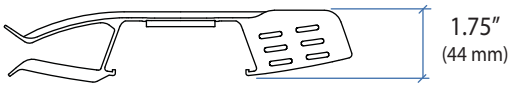

Top View

© 2010 Ergotron, Inc. rev. 02/10/2010 DIM-200 Combo **Content is subject to change without notification**

Americas Sales and Corporate Headquarters	EMEA Sales	APAC Sale	Worldwide OEM Sales
St. Paul, MN USA (800) 888-8458 +1-651-681-7600 www.ergotron.com sales@ergotron.com	Amersfoort, The Netherlands +31 33 45 45 600 www.ergotron.com info.eu@ergotron.com	Tokyo, Japan www.ergotron.com apaccustomerservice@ergotron.com	www.ergotron.com info.oem@ergotron.com

Ergotron® 200 Series

Dimensional Illustrations

Combo Arm

Range of Motion

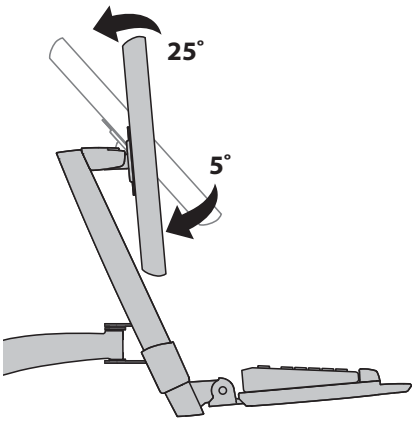

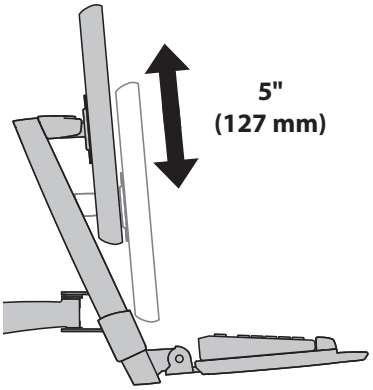

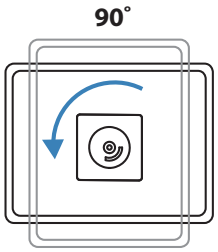

Front View

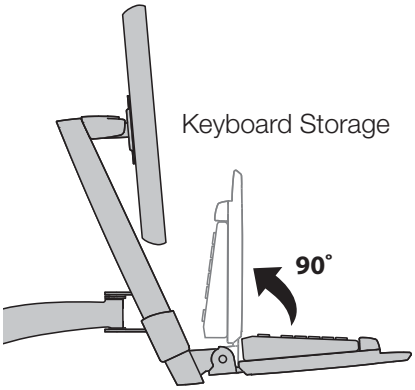

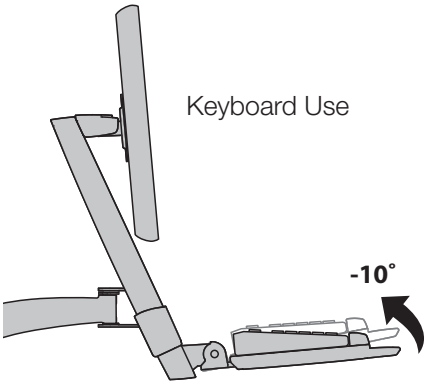

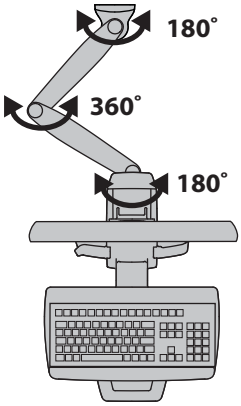

Top View

Maximum Weight Capacity

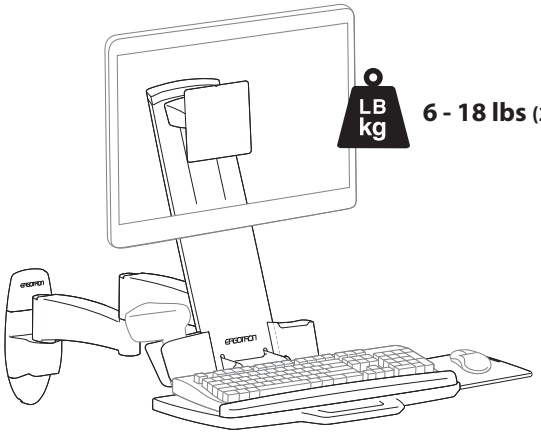

6 - 18 lbs (2.3 - 8.2 kg)

© 2010 Ergotron, Inc. rev. 02/10/2010 DIM-200 Combo **Content is subject to change without notification**

Americas Sales and Corporate Headquarters	EMEA Sales	APAC Sale	Worldwide OEM Sales
St. Paul, MN USA (800) 888-8458 +1-651-681-7600 www.ergotron.com sales@ergotron.com	Amersfoort, The Netherlands +31 33 45 45 600 www.ergotron.com info.eu@ergotron.com	Tokyo, Japan www.ergotron.com apaccustomerservice@ergotron.com	www.ergotron.com info.oem@ergotron.com